> Commercial Tablet
> Boxed Media Player
> OpenFrame & All-in-One 1080P Player

● Point-of-Sale ● Industrial ● Commercial

7" Metallic OpenFrame Monitor With HDMI-in

Industrial Grade Monitor With High Resolution LCD Panel

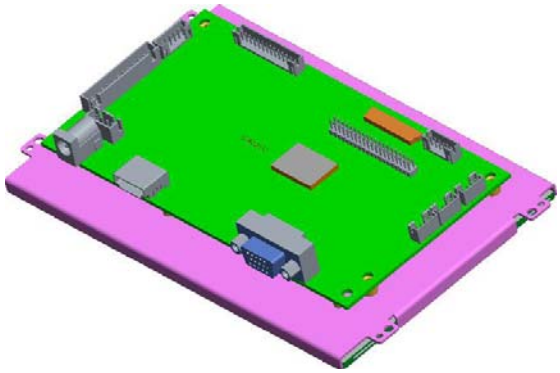

LCD Panel Information

Screen size : 7" (Diagonal)
Active area : 153.6(H) x 90.0(V) mm
Max. Resolution : 1024 (H) x 600 (V)
Brightness : 350 cd/m2
Contrast ratio : 700 : 1
Viewing angle : 85/85/85/85L/R/U/D)
Aspect Ratio: 16:9

Interface

DC-in: 12V x1;
USB: USB 2.0 Host
HDMI-in: x1Optional
DVI-in: x1 Optional
VGA-in: x1 Optional
Composite: x1 Optional
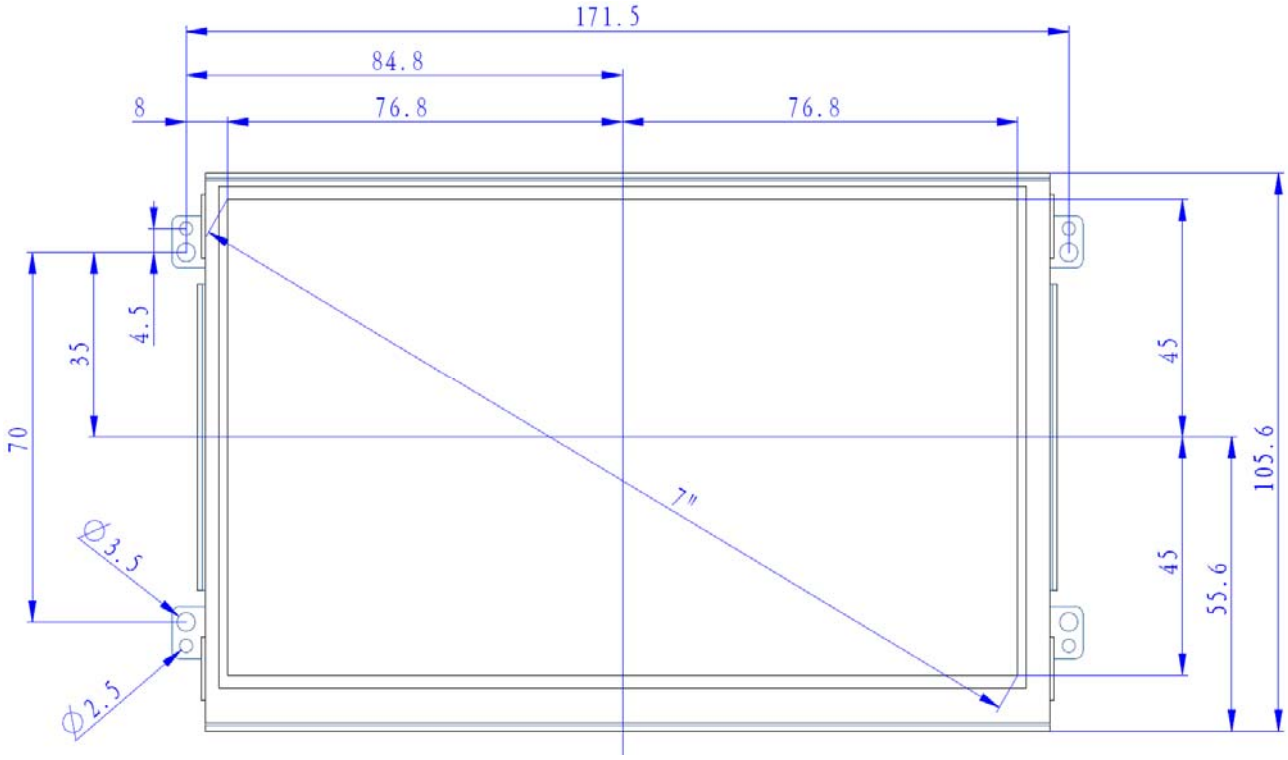
Mechanical Drawings